GONIOMETER SIGNAL AMPLIFIER & DETECTOR

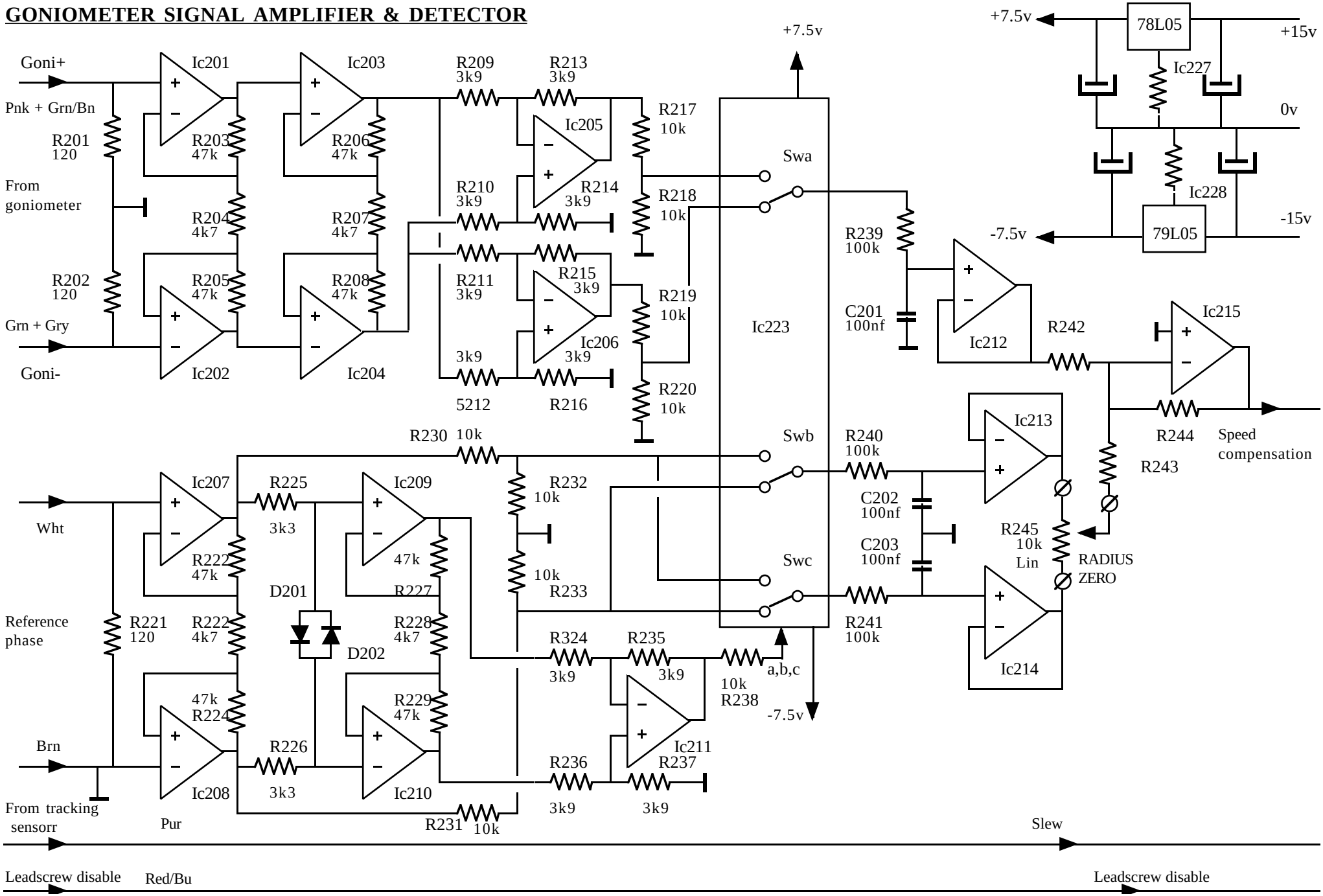

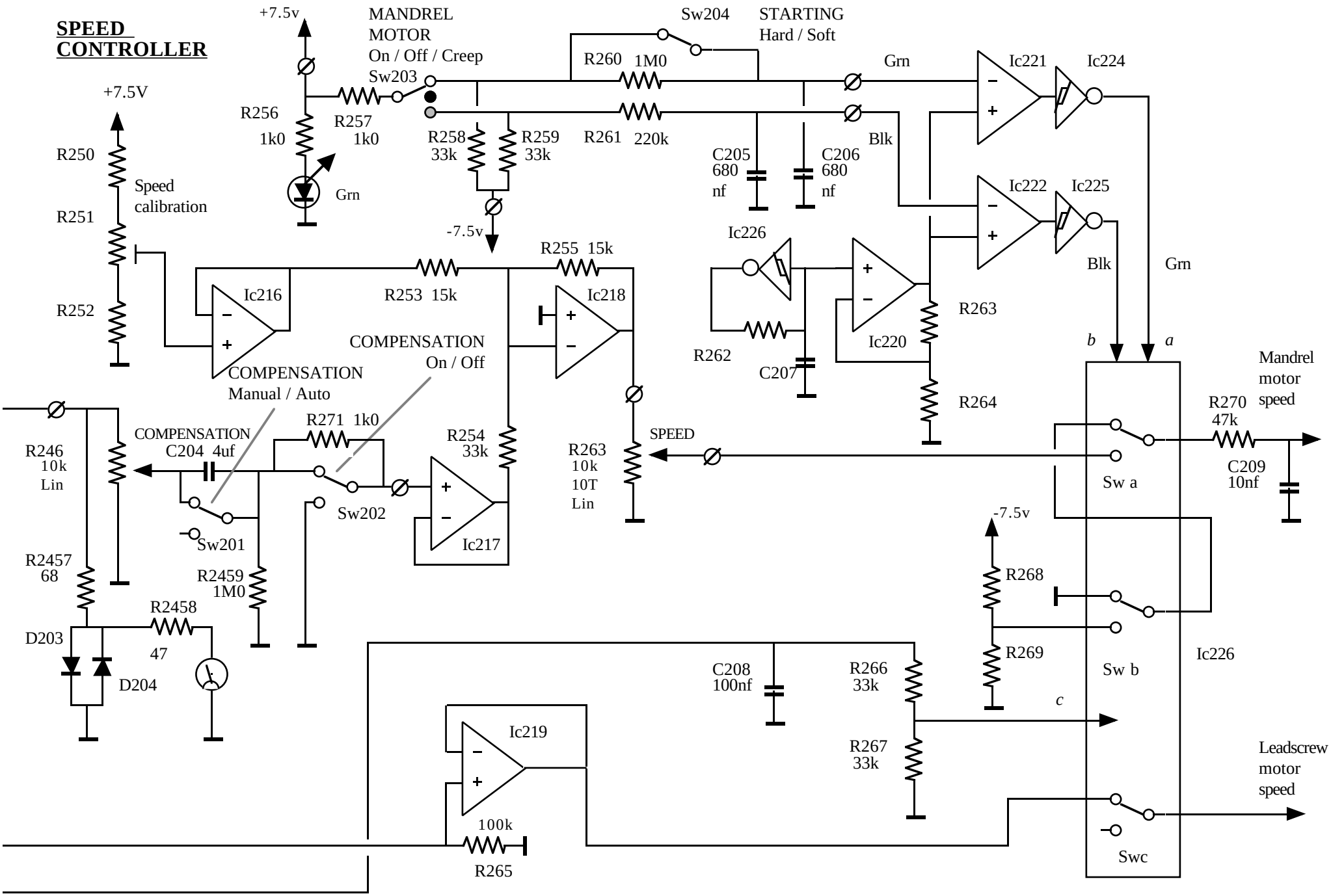
SPEED CONTROLLER
+7.5v
MANDREL MOTOR On / Off / Creep Sw203
Sw204
STARTING Hard / Soft
R260 1M0
R261 220k
Grn
Blk
Ic221
Ic224
Ic222
Ic225
+7.5V
R250
R251
R252
Speed calibration
R256 1k0
R257 1k0
Grn
R258 33k
R259 33k
-7.5v
C205 680 nf
C206 680 nf
Ic226
R255 15k
R253 15k
Ic216
Ic218
Ic220
R262
C207
R263
R264
COMPENSATION On / Off
COMPENSATION Manual / Auto
b
a
Mandrel motor speed
R270 47k
C209 10nf
Sw a
R246 10k Lin
COMPENSATION C204 4uf
R271 1k0
R254 33k
R263 10k 10T Lin
SPEED
Sw201
Sw202
Ic217
-7.5v
R268
R269
R2457 68
R2459 1M0
R2458 47
D203
D204
C208 100nf
R266 33k
R267 33k
Sw b
Ic226
c
Ic219
100k
R265
Leadscrew motor speed
Swc